Thank you very much for your support and cooperation!please check if there are missing components in the carton before assembling the goods,thanks

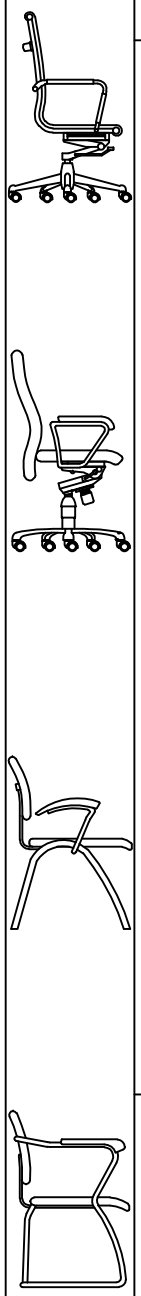

STEP 1

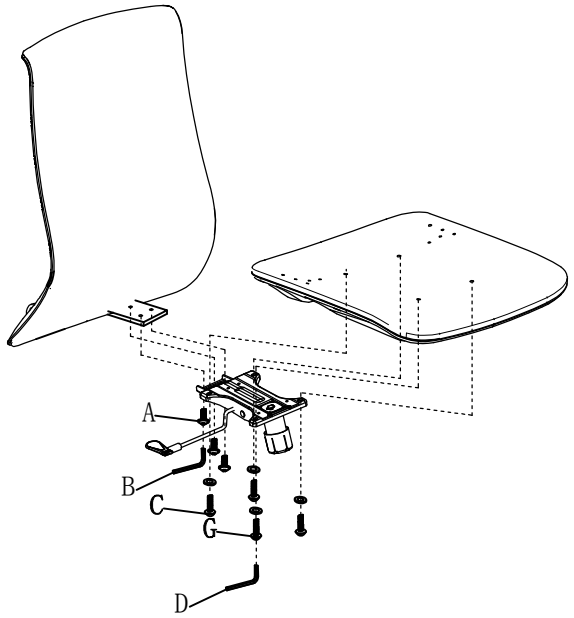

STEP 2

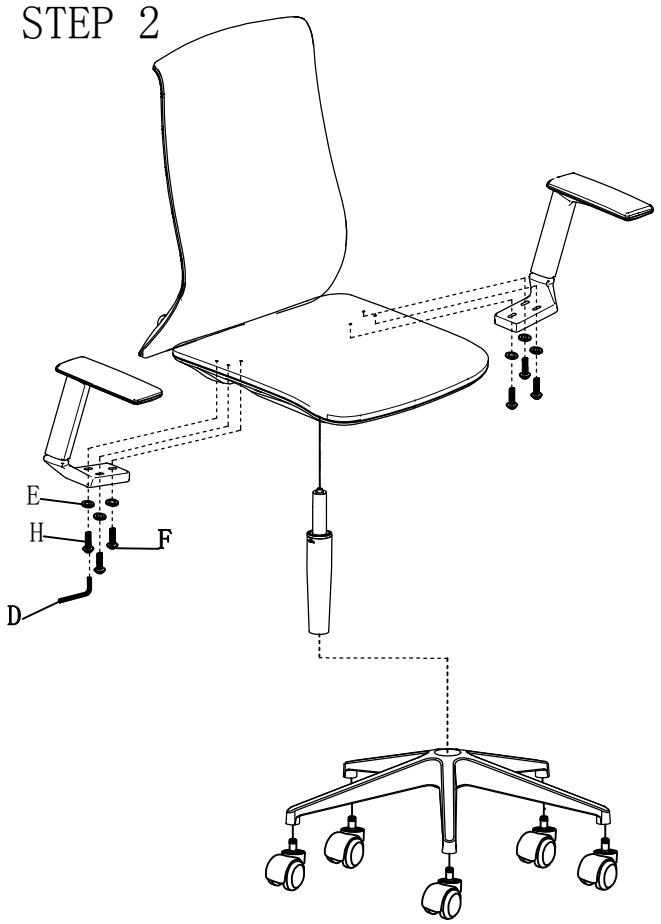

CM-B253BS-1

NO.	A	B	C	D	E	F	G	H
TYPE	M8x16	6mm	M6x30	5mm	ϕ8x1.2	M6x35	M6x35	M6x40
QTY.	3 PCS	1 PC	2 PCS	1 PC	10 PCS	2 PCS	2 PCS	4 PCS