ASSEMBLY INSTRUCTION

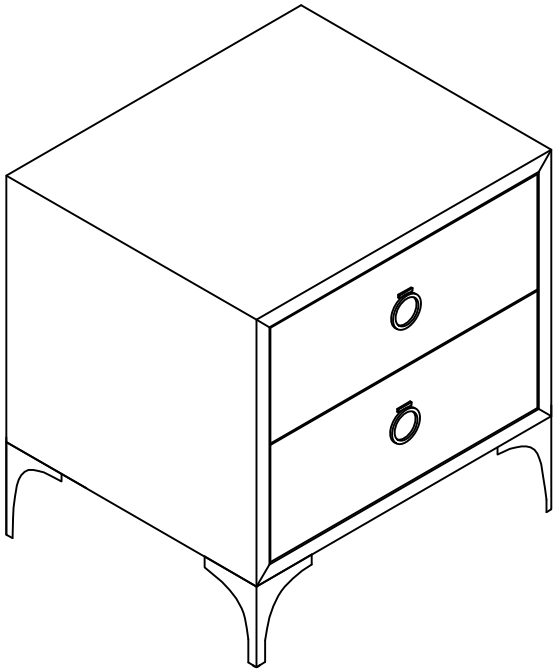

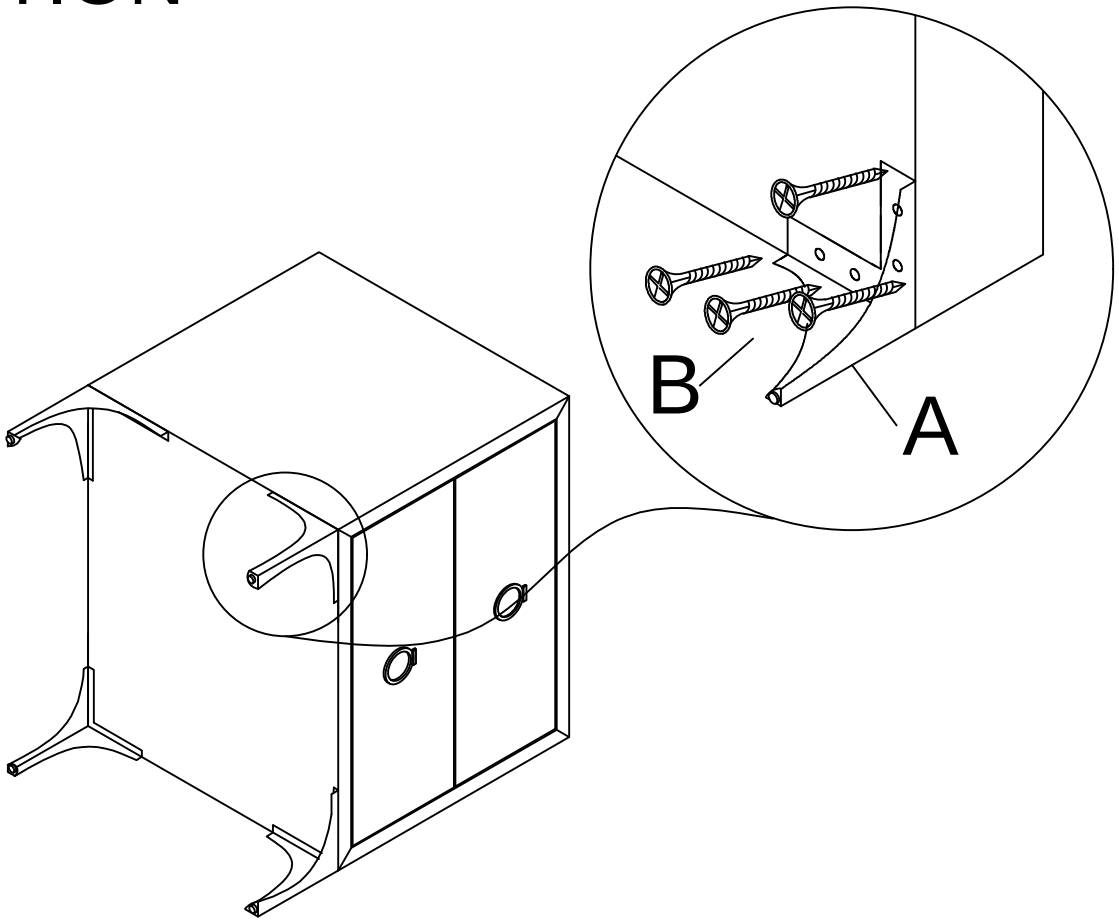

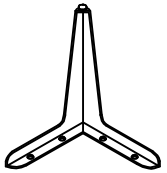

AX4

M4X20mm

BX16