5

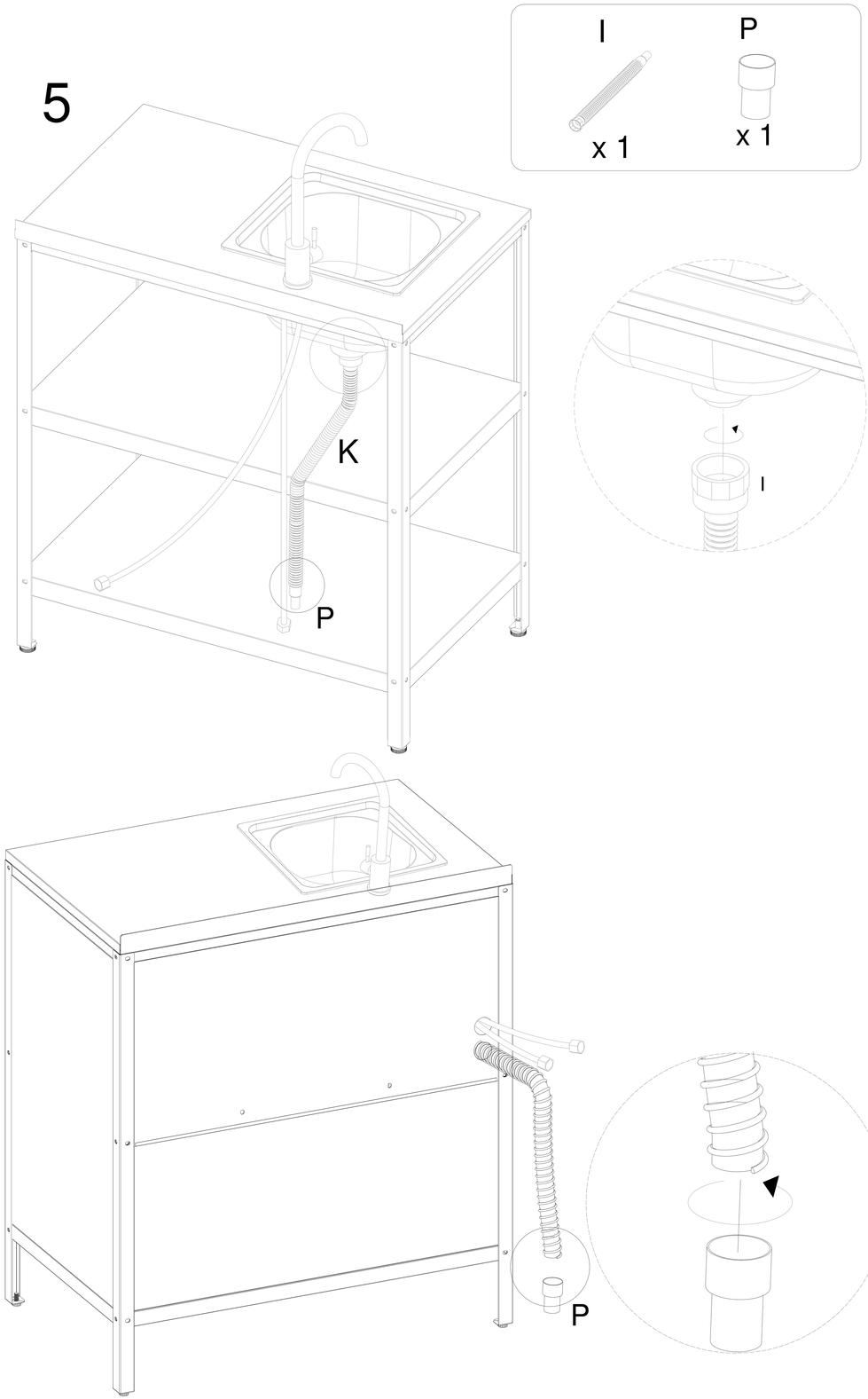
I
x 1
P
x 1
K
I
P
P

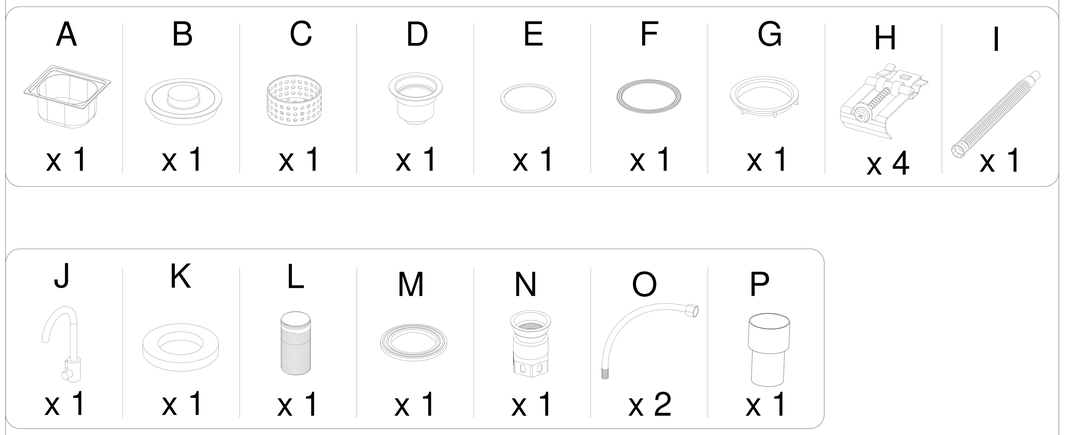
A
x 1
B
x 1
C
x 1
D
x 1
E
x 1
F
x 1
G
x 1
H
x 4
I
x 1

J
x 1
K
x 1
L
x 1
M
x 1
N
x 1
O
x 2
P
x 1

1

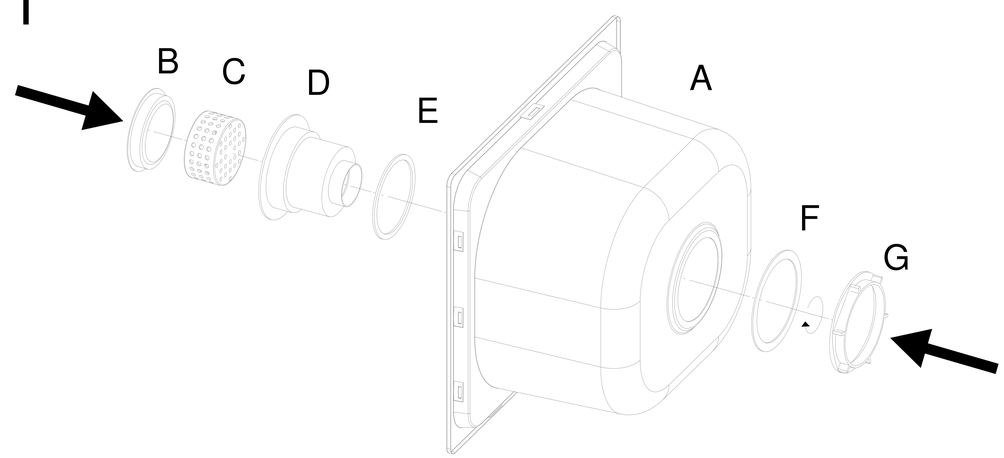
B
C
D
E
A
F
G

2

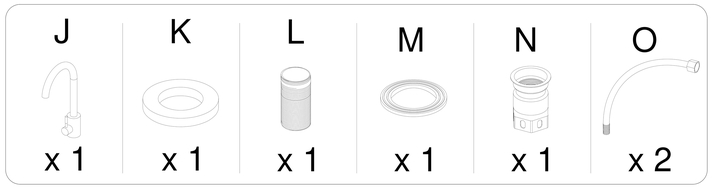

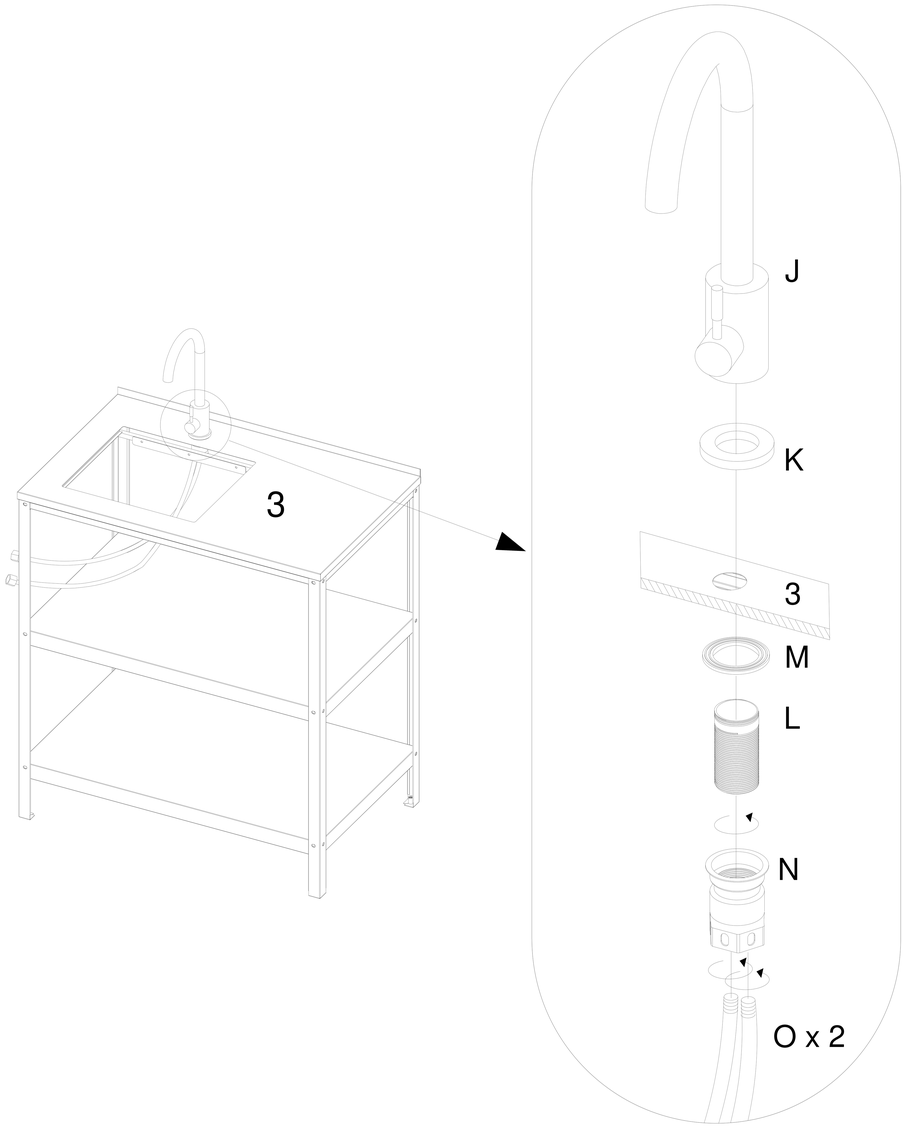

3

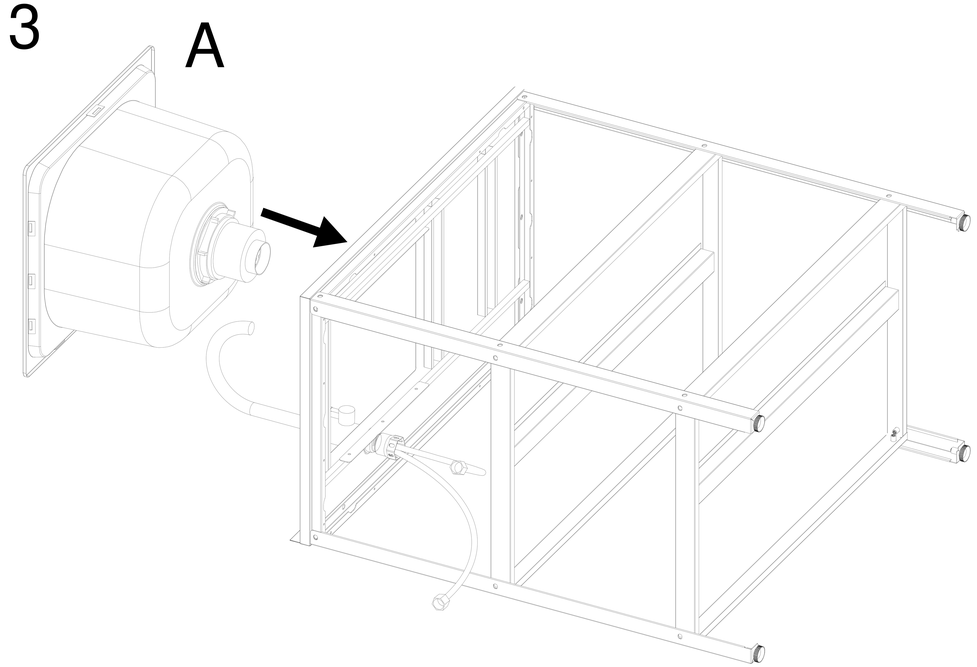
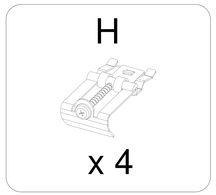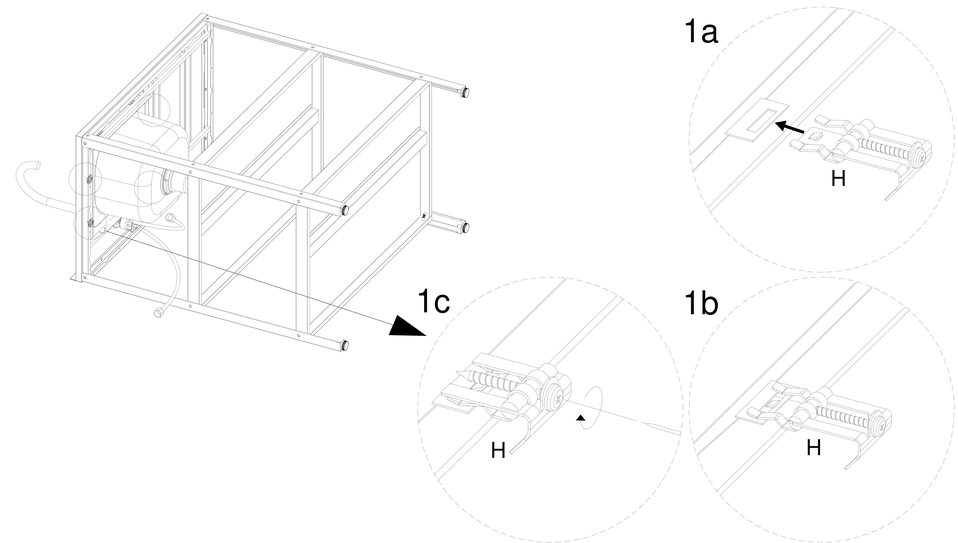
4